BCL25-700-8

22/25 kW Liquid Cooled On-Board Battery Charger

The Bel Power Solutions BCL25-700-8 is a 22/25 kW bi-directional liquid-cooled on-board inverter battery charger with export functionalities for hybrid (HEV) or full electric (EV) vehicles.

With the BCL25-700-8, it is possible to connect this inverter charger directly to an EVSE charging station or for connection directly to the public grid (Single-Phase 190 – 264 VAC or Three-Phase 330 – 528 VAC) to charge the HV batteries.

The output voltage covers a wide variety of HV batteries in the range from 240 VDC to 800 VDC with constant output current of 60 A. When not running from the engine, but from the HV batteries, up to 22/25 kW can be exported to power three-phase AC equipment.

RoHS Compliant

FEATURES

- Input power up to 22/25 kW @ 400/480 VAC
- Typical efficiency 95%
- AC input range:
  - Three phases: 330 - 528 VAC (L-L)
  - Single phase: 190 – 264 VAC (L-N)
- DC output 240 - 800 VDC
- Bi-directional operation:
  - AC-DC charge mode
  - DC-AC export mode
- Parallelable up to 4 units in charge mode
- Over temperature, output over voltage and over current protections
- Operating temperature -40°C to 60°C at full load
- Active HVDC interlock monitoring
- SAE J1939 compliant CAN control and monitoring
- SAE J1455 compliant environmental standards
- SAE J1772 & EN 61851 compliant
- IEC 61851-21-1 compliant immunity requirements
- IP65 and IP67 Rating

APPLICATIONS

- Hybrid and Electric Vehicles
- Medium through heavy duty, on and off highway vehicles

1. MODEL SELECTION

MODEL	DESCRIPTION
BCL25-700-8	Liquid cooled on-board battery charger

2. INVERTER CHARGER SUBSYSTEM

2.1 AC SIDE CHARGE MODE INPUT

PARAMETER	DESCRIPTION / CONDITIONS	MIN	NOM	MAX	UNIT
Input Voltage 3-phase	Nominal operating range Absolute operating range	 330	400/480	 528	V_{AC}
Input Voltage 1-phase	Nominal operating range Absolute operating range	 190	230	 264	V_{AC}
Input Current	Charge mode:			32	A_{AC}
Input Frequency		47	50/60	63	Hz
Leakage Current	at 528 V_{AC}, 63 Hz, 3-phase at 264 V_{AC}, 63 Hz, 1-phase			3.5 10	mA
Power Factor	V_{AC_IN} = 400 V_{RMS}, 3-phase, P_{IN} > 11 kW	0.99			
Input Inrush Current	Pre-charge mechanism				
Efficiency	V_{AC_IN} = 400 V_{RMS}, 3-phase, P_{IN} > 11 kW		95		%

2.2 AC SIDE EXPORT MODE OUTPUT

PARAMETER	DESCRIPTION / CONDITIONS		MIN	NOM	MAX	UNIT
Output Voltage	3-phase			400 480		V_{AC}
Output Current	Export mode:			3x 32		A_{RMS}
Output Power	at 400 V_{AC} at 480 V_{AC}				20.5 23.5	kVA
Frequency	CAN selectable 50 or 60 Hz	Mode: 50 Hz Mode: 60 Hz	49.9 59.9	50 60	50.1 60.1	Hz
Efficiency	at V_{HV} = 350 V_{DC} (nom), P_{IN} > 11 kW			95		%
Load Step Response	Load Step 1: 3 A_{AC} to 15 A_{AC} and back Load Step 2: 15 A_{AC} to 30 A_{AC} and back	Voltage deviation	-10 %	0	+10 %	V_{AC}
Total Harmonic Distortion	Load 0 – 32 A_{AC}	U_{THD}			3	%
Turn On/Off Delay	Export Mode:	Turn-On Delay Turn-Off Delay			5 0.1	s

2.3 HV DC SIDE CHARGE/EXPORT MODE

PARAMETER	DESCRIPTION / CONDITIONS	MIN	NOM	MAX	UNIT
Output Type	DC current source with 100/120 Hz sine wave ripple component				
Output Voltage	Not regulated; depends on battery voltage	250		800	V_{DC}
Output Current	Average output charging current adjustable via CAN Including AC ripple component (AC + DC)			60 66	A_{DC} A_{AC}
Output Current Ripple	100/120 Hz, 3-phase 100/120 Hz, 1-phase			6 60	A_{PK-PK}
Input Capacitance			50		µF
Inrush Current	Use external pre-charge resistor 50 Ohm			20	A

2.4 PROTECTIONS

PARAMETER	DESCRIPTION / CONDITIONS	MIN	NOM	MAX	UNIT
AC Over Current Protection	Export mode: 10 s current limit Phase - L1, L2, L3			32	A_{RMS}
AC Over Voltage Protection	at 528 V_{RMS}, 3-phase at 264 V_{RMS}, 1-phase	528 264		535 275	V_{RMS}
AC Under Voltage Protection	at 330 V_{RMS}, 3-phase at 190 V_{RMS}, 1-phase	320 180		330 190	V_{RMS}
HV DC Over Current Protection	CAN adjustable			60	A
HV DC Over Voltage Protection	Latch type, CAN adjustable, max. OVP duration 1 ms	250		800	V_{DC}
HV DC Under Voltage Protection	UVP duration 1 s	230		250	V_{DC}
Input & Output Fuse Protection	AC input fuse internal, EVSE external circuit breaker Type C HV external input fuse (800 V_{DC} minimum): Aux_Supply_12/24 V fuse: external automotive fuse		32 80 5		A
Over Temperature Protection	Converter shutdown at T_coolant higher than		75		°C

3. MONITORING AND CONTROL SIGNALS

PARAMETER	DESCRIPTION / CONDITIONS
IGN (Key Switch)	CAN communication enable Level High = Enable (connected to +VBAT)
Control Pilot	Function and levels according to SAE J1772 Duty cycle accuracy ± 2% in range 20 – 96%. Duty cycle accuracy -2/+5% in range 10 – 20%.
Proximity Detection	Function and levels according to SAE J1772
VBAT	12/24 V battery voltage input. Used to supply internal aux converter. Input protected against reverse connected.
EVSE_WAKE_OUT	Energy taken from VBAT. High side switch to wake VCU (Vehicle Control Unit) and other vehicle control modules. Output is protected by resettable PTC fuse.
CAN_BAUD_RATE	CAN bus speed; CAN speed settings is detected only at start up when 12 V voltage is applied. 500 kbit/s – signal not connected / left floating 250 kbit/s – signal grounded; connected to 12V_RTN

4. ENVIRONMENTAL SPECIFICATIONS

PARAMETER	DESCRIPTION / CONDITIONS	MIN	NOM	MAX	UNIT
Operating Temperature	T_coolant at full load T_coolant at 50% power derating T_ambiant at full load	-40 +60 -40		+60 +75 +80	°C
Storage Temperature		-40		+85	°C
Altitude	SAE J1455, Operating: Non-Operating: 18.6 kPa absolute pressure			4000 12200	m
Humidity	SAE J1455			95	%
Thermal Shock	SAE J1455, Tamb = -40°C to +85°C (no coolant cycling)				
Vibration *	ISO 16750-3-2012 (Commercial vehicle, sprung masses)				
Protection	IP65 and IP67, when all matting connectors are installed				

** ISO 16750-3:2012 is a valid standard for the units with the HW revision B or higher. For the units with the older HW revision the valid vibration standard is SAE J1455.*

© 2022 Bel Power Solutions & Protection

5. COOLING SPECIFICATIONS

PARAMETER	DESCRIPTION / CONDITIONS
Cooling Type	Liquid cooled
Maximum Inlet Coolant Temperature	+75°C (50% derating above +60°C)
Operational Ambient Air Temperature	-40°C to +80°C
Coolant Medium / Mixture	50/50 ethylene glycol/distilled water with proper corrosion inhibitor
Coolant Volume in Cooling System	1 L
Coolant Flow	10 - 20 LPM
Maximum Coolant Pressure (gauge)	29 psig (2 bar)
Pressure drop @ 10 L / min, at T= 20°C	2.5psi (0.17 bar)
Inlet/Outlet Cooling System Connection	M18 x 1.5 DIN 9974-1
Material of Fittings	Aluminum alloy

6. SAFETY, REGULATORY AND EMI SPECIFICATIONS

PARAMETER	DESCRIPTION / CONDITIONS	CLASS / LEVEL / CRITERION
Radiated Emission	IEC 61851-21-1:2017	According norm
Conducted Emission	IEC 61851-21-1:2017	According norm
Emission of voltage changes, voltage fluctuations & flicker on AC power lines	IEC 61851-21-1:2017	According norm
Harmonic Input Current	IEC 61000-3-2:2014 and IEC 61000-3-12:2011	According norm
Electrostatic Discharge	IEC 61204-3:2014; Level 3	Performance Criterion B
Radiated Electromagnetic Field	ISO 11452-2:2004, SAE J1113/21	Performance Criterion B Status 2
Electrical Fast Transient (EFT) /Burst	IEC 61000-4-4; Level 2 (± 5 kHz)	Performance Criterion B
Surge Immunity	IEC 61000-4-5; Level 3 surge (± 1 kV DM and ± 2 kV CM)	Performance Criterion C
RF Conducted Immunity	IEC 61000-4-6; Level 3 (10 V, 0.15…80 MHz, 80% AM, 1 kHz)	Performance Criterion A
Bulk Current Injection (BCI)	ISO 11452-4-5; 20 - 200 MHz, 60 mA, 80% AM	Class B
Capacitive Coupling Clamp (CCC)	ISO 7637-3; -60 V, +40 V,	Class A
Electrical Transient Conduction Along Supply Lines	ISO 7637-2:2011 Pulse number 1 Pulse number 2a Pulse number 2b Pulse number 3a Pulse number 3b	 C A C A A
Starting Profile	ISO 16750-2	A
Load Dump	ISO 16750-2	A
Insulation (factory tested)	AC Input to HV output: AC Input to chassis: HV Output to chassis:	2500 V_{DC} 2500 V_{DC} 2500 V_{DC}

7. CONNECTORS

PARAMETER	DESCRIPTION / CONDITIONS	MANUFACTURER	MPN
AC Side Connector	Inverter Charger side Mating connector	TE Connectivity	HVA630-5P : 0-2141619-1 HVA630-5P :114-94114-1
HV Power Connector	Inverter Charger side Mating connector	Amphenol	HVSLS600022A1H6 HVSLS600062A125
Signal Connector	Inverter Charger side Mating connector	TE Connectivity	DRC23-40PAN012 DRC26-40SA

7.1 AC SIDE POWER CONNECTOR

Charger side: **MFG: TE Connectivity;** PN: HVA630-5P : 0-2141619-1
Mating connector: MFG: TE Connectivity; PN: HVA630-5P : 114-94114-1

Use copper conductors only with an insulation rating of 120°C, 6 mm², OD 16.3 mm

Follow connector MFG instructions for correct connector assembly.

It is highly recommended to use screened connecting cables
(e.g. Coroplast, FHLR2GCB2G 5x 6.0 mm² T180).

Note: HVIL pins shall be shorted on mating part.

PIN	DESCRIPTION	3 PHASE CONNECTION	1 PHASE CONNECTION (EU)	1 PHASE CONNECTION (US)
1	PE	PE	PE	PE
2	Phase L3	Phase L3		Phase L2 (120 V)
3	Phase L2	Phase L2		
4	Phase L1	Phase L1	Phase L1 (230 V)	Phase L1 (120 V)
5	Neutral		Neutral	

AC input connector, Charger side

AC input connector, Cable side

7.2 DC SIDE POWER CONNECTOR

Charger side: **MFG: Amphenol;** PN: HVSLS600022A1H6
Mating connector: MFG: Amphenol; PN: HVSLS600062A125

Use copper conductors only with an insulation rating of 120°C, 25 mm², OD 11.9 mm

Follow connector MFG instructions for correct connector assembly.

It is highly recommended to use screened connecting cables
(e.g. Coroplast, FHLR2GCB2G 1x 25 mm² T180).

Note: HVIL pins shall be shorted on mating part.

PIN	DESCRIPTION
1	HV DC negative
2	HV DC positive

DC output connector, Charger side

DC output connector, Cable side

9.3 SIGNAL CONNECTOR

Charger side: **MFG: TE Connectivity;** PN: DRC23-40PAN012
Mating connector: MFG: TE Connectivity; PN: DRC26-40SA,
max. 2 A per pin (wire AWG 20)

Pin PN: 1062-20-0144

It is recommended to use screened connecting cables.

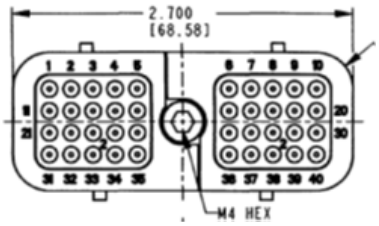

Signal connector, Charger side

Signal connector, Cable side

© 2022 Bel Power Solutions & Protection

PIN	NAME	FUNCTION	REFERENCE PIN
1	PROXIMITY	Function and levels according SAE J1772	PE
2	SGND	Internally connected with pin 12	-
3	EVSE_WAKE_OUT	Wake Output goes high when Control Pilot is active (max. delay 100 ms) and goes low when CAN command from VCU is received or when goes into sleep mode or delayed sleep mode.	Pin 2
4	HVIL_IN	Input pin for HVIL loop (To detect if connectors are properly inserted.)	Pin 5
5	HVIL_OUT	Output pin for HVIL loop	Pin 4
6	+VBAT	Internally connected with pin 16, connect both pins	Pin 26, Pin 36
7	LOCK_LOOP_A	Plug motor interlock signal	Pin 8
8	LOCK_LOOP_B		-
9	LOCK_ACTUATOR_A	Plug motor lock A	Pin 10
10	LOCK_ACTUATOR_B	Plug motor lock B	Pin 9
11	CONTROL PILOT	Function and levels according SAE J1772	PE
12	SGND	Internally connected with pin 2	-
13	KEY_SWITCH	This is signal for CAN communication enable (Level HIGH = enable)	Pin 6
14	TEMP_EXT+	External temperature sensor +	Pin 15
15	TEMP_EXT-	External temperature sensor -	Pin 14
16	+VBAT	Internally connected with pin 6, connect both pin	Pin 26, Pin 36
17	SYNC_I/O	Signal for synchronization of the units working in parallel	Pin 18
18	SGND		-
19	CAN_SPEED	Setting of the CAN baud rate (float 500 kB)	Pin 20
20	SGND		-
21	SGND	Internally connected with pin 22 and 23	-
22	SGND	Internally connected with pin 21 and 23	-
23	SGND	Internally connected with pin 21 and 22	-
24	BUTTON_A		Pin 23
25	BUTTON_B		Pin 23
26	-VBAT	Internally connected with pin 36, connect both pin	-
27	ADDR_0	Inputs to set addresses of 4 parallel units. Internally pulled-up for logic level H. Connection to 12/24V_RTN = logic level L.	Pin 28
28	SGND	Internally connected with pin 38	-
29	CAN_H_INT	Diagnostic line	-
30	CAN_L_INT	Diagnostic line	-
31	LED_A		Pin 21
32	LED_B		Pin 22
33	LED_C		Pin 23
34	BUTTON_LED_A		Pin 23
35	BUTTON_LED_B		Pin 23
36	-VBAT	Internally connected with pin 26, connect both pin	-
37	ADDR_1	Inputs to set addresses of 4 parallel units. Internally pulled-up for logic level H. Connection to 12/24V_RTN = logic level L.	Pin 38
38	SGND	Internally connected with pin 28	-
39	CAN_H_EXT	CAN communication	Pin 40
40	CAN_L_EXT	CAN communication	Pin 39

8. MECHANICAL SPECIFICATIONS

PARAMETER	DESCRIPTION / CONDITIONS	MIN	NOM	MAX	UNIT
Dimensions	W x H x D		705 x 106 x 359 27.75 x 4.17 x 14.13		mm in
Weight			19		kg
Enclosure Material	Aluminum alloy				

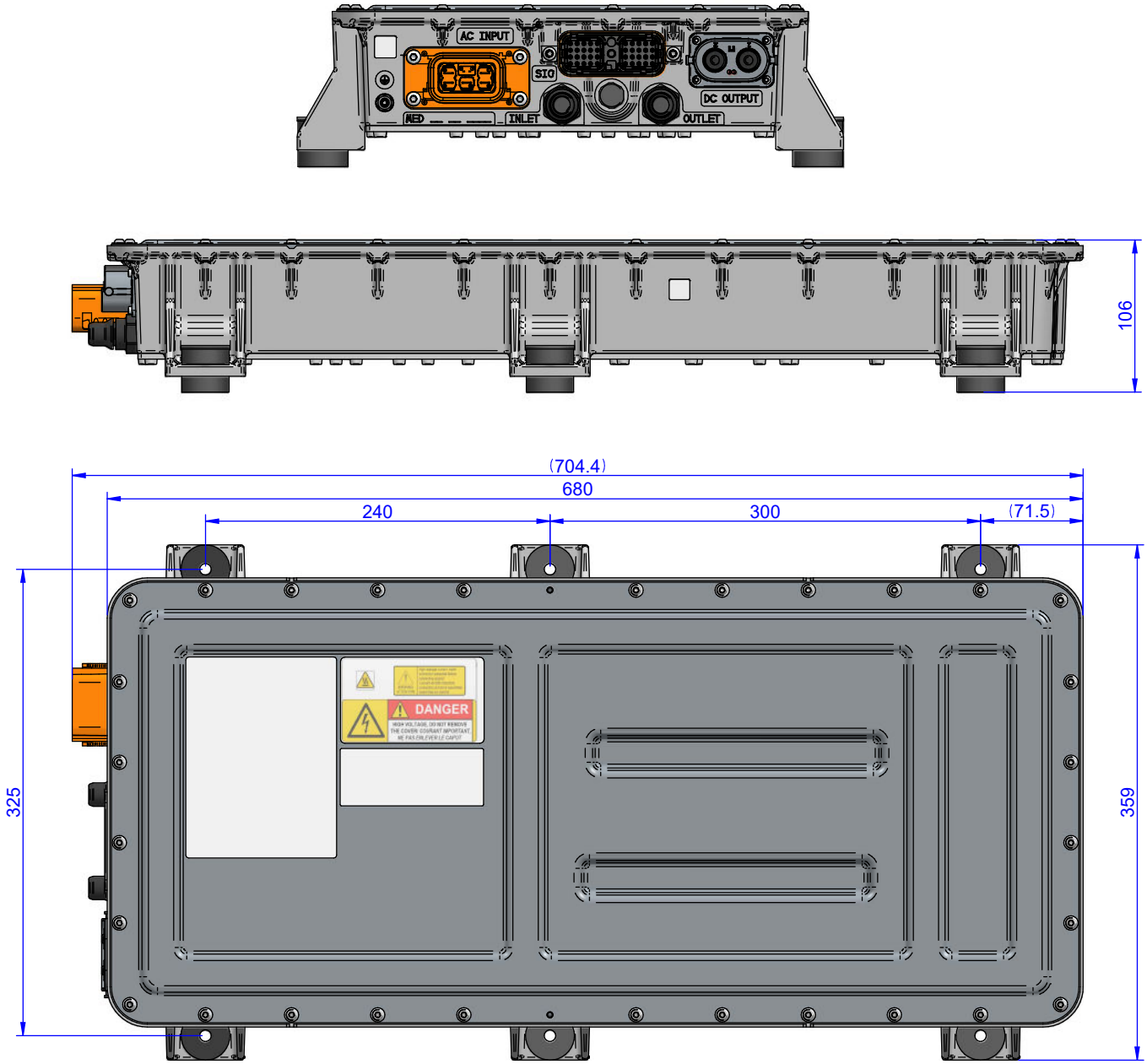

Figure 1. Mechanical Dimensions

© 2022 Bel Power Solutions & Protection

9. POWER WIRING DIAGRAM

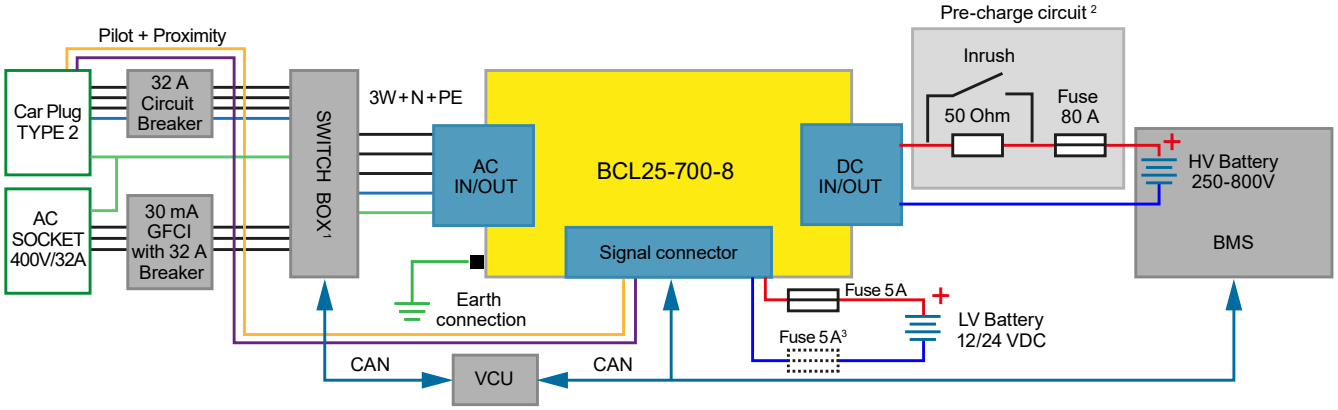

[1] *Switch box is required only when the customer is using the BCL25-700-8 in both charge mode & inverter/export mode in an elecric vehicle.*
[2] *External pre-charge circuit is required only when it is not part of the Battery Management System (BMS).*
[3] *For the applications where the -VBAT is distributed through the chassis we are recommending to use additional fuse on the -VBAT.*

Figure 2. Power Wiring Diagram

10. SIGNAL CONNECTOR CONNECTION

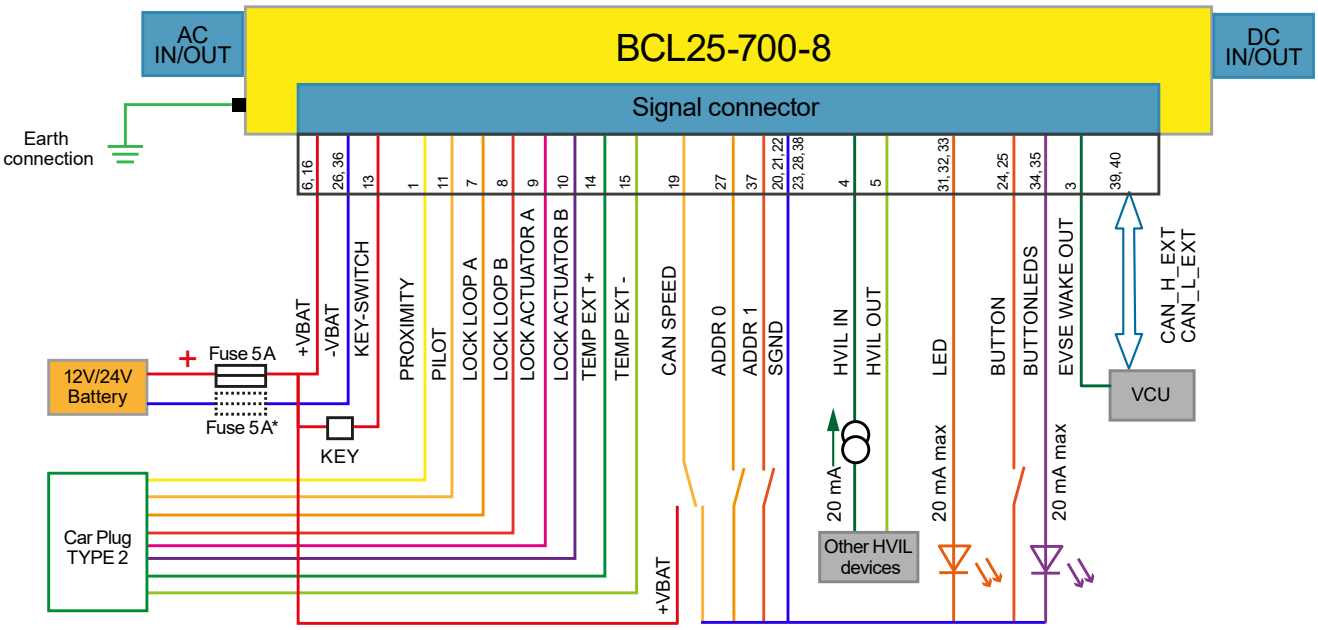

Notes:
1. CAN_SPEED is open => CAN baud rate = 500 kbps;
2. ADDR_0 and ADDR_1 are open => CAN address = 0xD0
3. CAN communication manual reference document: BCA.00290 (provided on the customer request).
4. HVIL loop is possible to disable, but it is not recommended. HVIL loop is possible to create from 12V/24V battery. +VBAT should be connected to HVIL IN. On HVIL OUT is necessary to connect resistor (600 Ohm for 12V or 1200 Ohm for 24V) to -VBAT for achieve 20mA current loop.
** For the applications where the -VBAT is distributed through the chassis we are recommending to use additional fuse on the -VBAT.*

Figure 3. Signal Connector Connection

11. ACCESSORIES

ACCESSORY	DESCRIPTION
BCL25-700-CON-KIT	Connector Kit (AC connector with the 6 m cable, HV DC connector, Signal Connector)

Figure 4. Connector Kit BCL25-700-CON-KIT

For more information on these products consult: tech.support@psbel.com

NUCLEAR AND MEDICAL APPLICATIONS - Products are not designed or intended for use as critical components in life support systems, equipment used in hazardous environments, or nuclear control systems.

TECHNICAL REVISIONS - The appearance of products, including safety agency certifications pictured on labels, may change depending on the date manufactured. Specifications are subject to change without notice.

© 2022 Bel Power Solutions & Protection